#700272 24” X 48” METAL FRAME TWO SIDED FLOOR DISPLAY

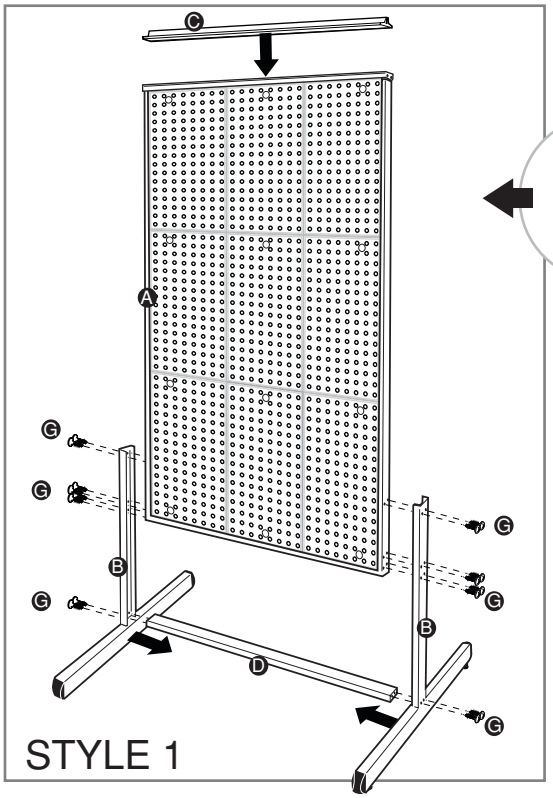

STYLE 1
OR
STYLE 2

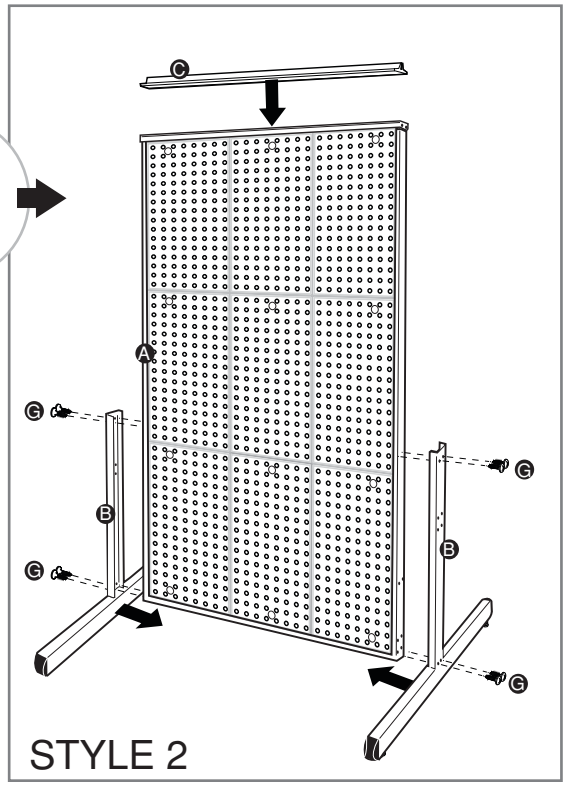

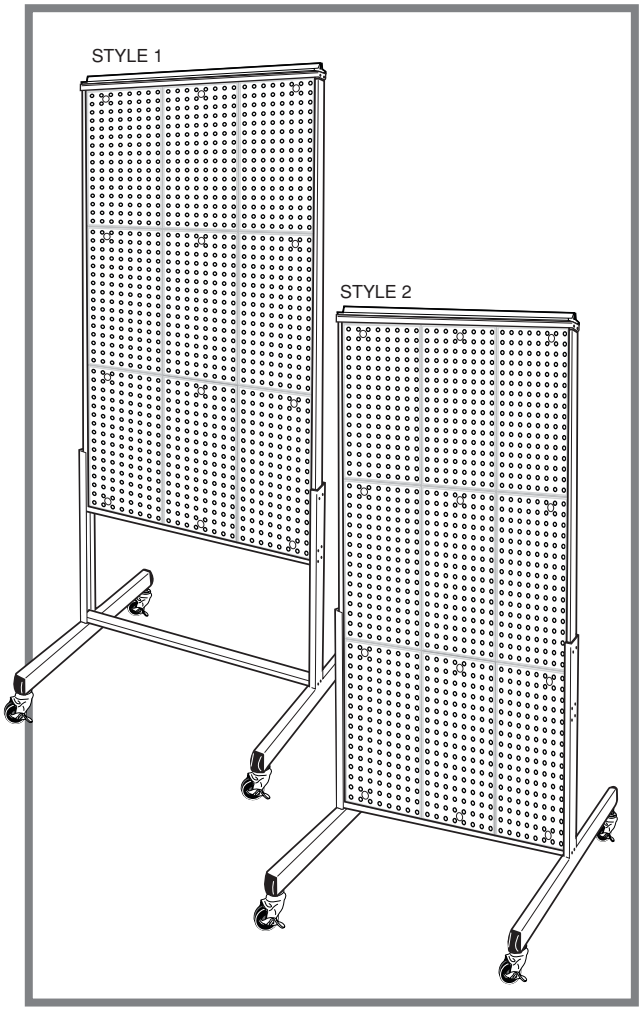

700248-CLR A

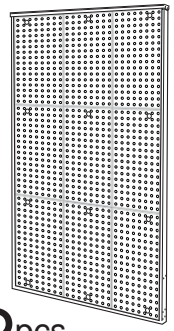

2 pcs.
24” X48” FRAMED PEGBOARD PANEL

B

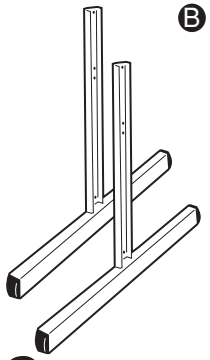

2 pcs.
FRAME LEGS

Choose to add wheels (FIG.A) or levelers (FIG.B) by screwing it on the bottom of the frame legs.

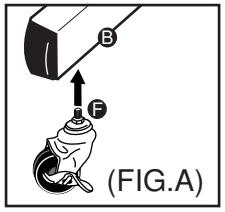

(FIG.A)

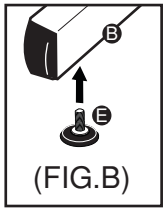

(FIG.B)

700089-CLR C

1 pc.
EXTRUSION STRIP

D

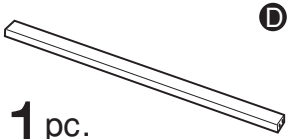

1 pc.
BOTTOM SUPPORT FRAME BRACE

600025 E

4 pcs.
LEVELERS

P-DH-WHL F

4 pcs.
WHEELS

P-SCREW-.625SM G

16 pcs.
SCREWS